CITY OF AUBURNDALE

FIRE LINE BACK FLOW PREVENTION

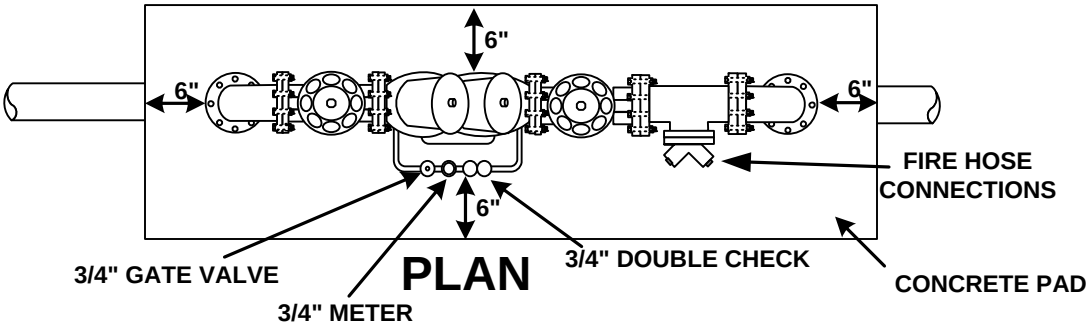

PLAN

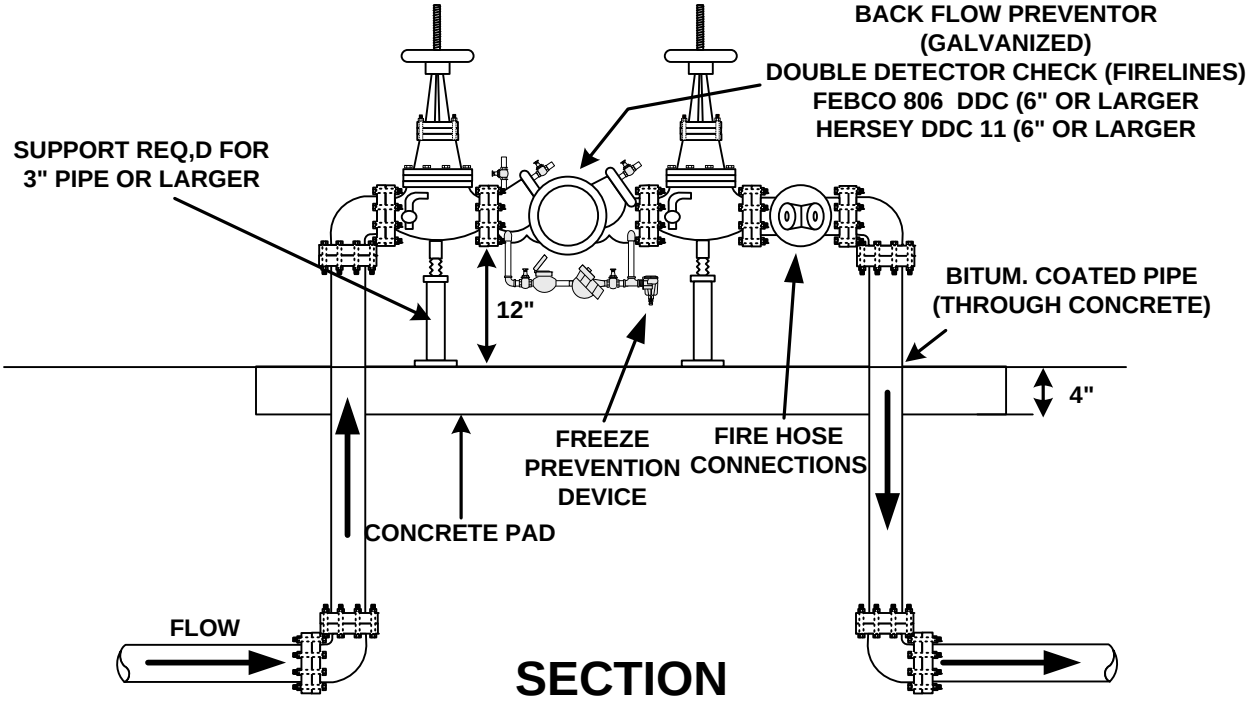

SECTION