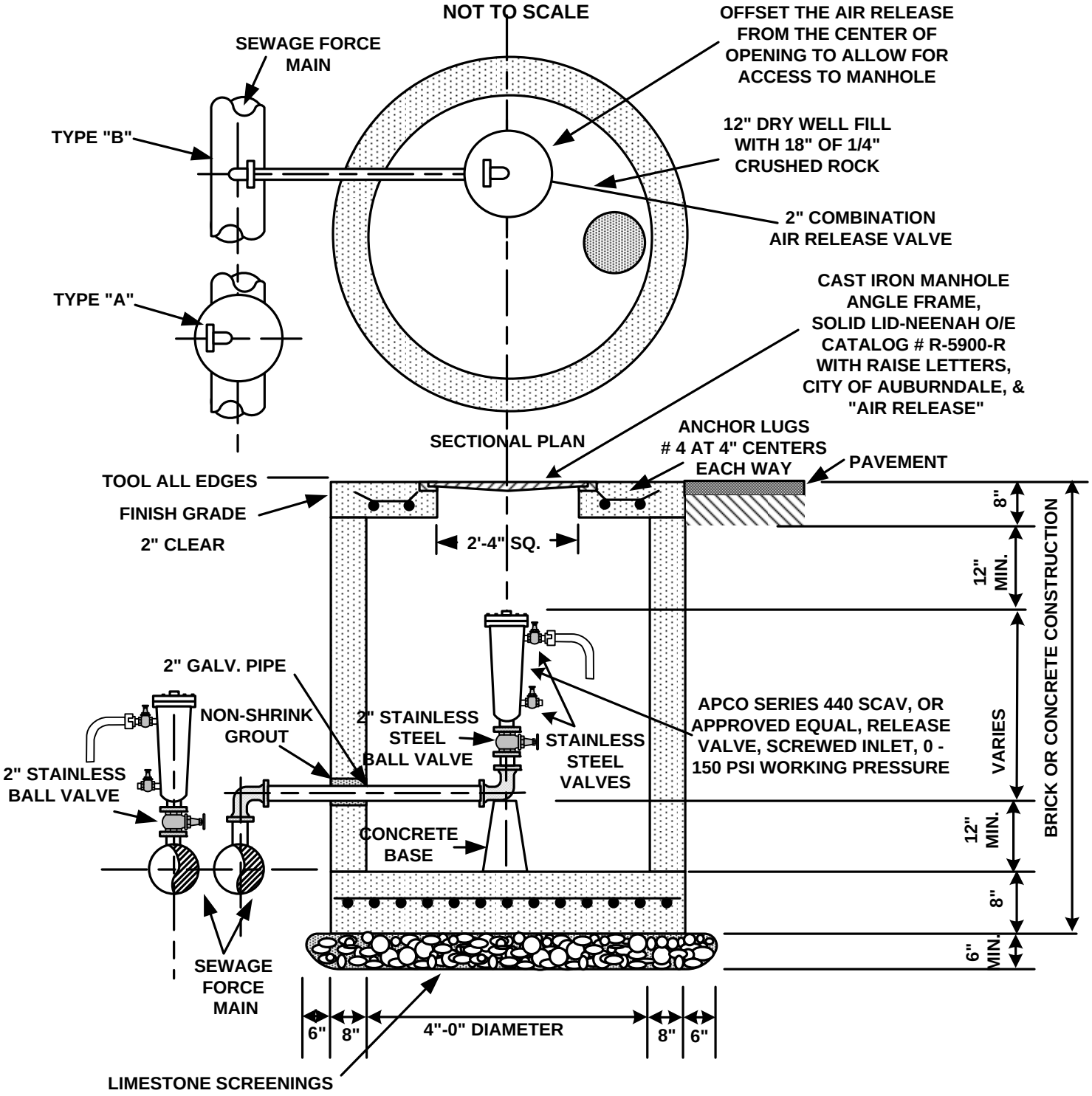CITY OF AUBURNDALE
SEWAGE COMBINATION AIR RELEASE VALVE & BOX