CITY OF AUBURNDALE
WATER AIR RELEASE VALVE & BOX
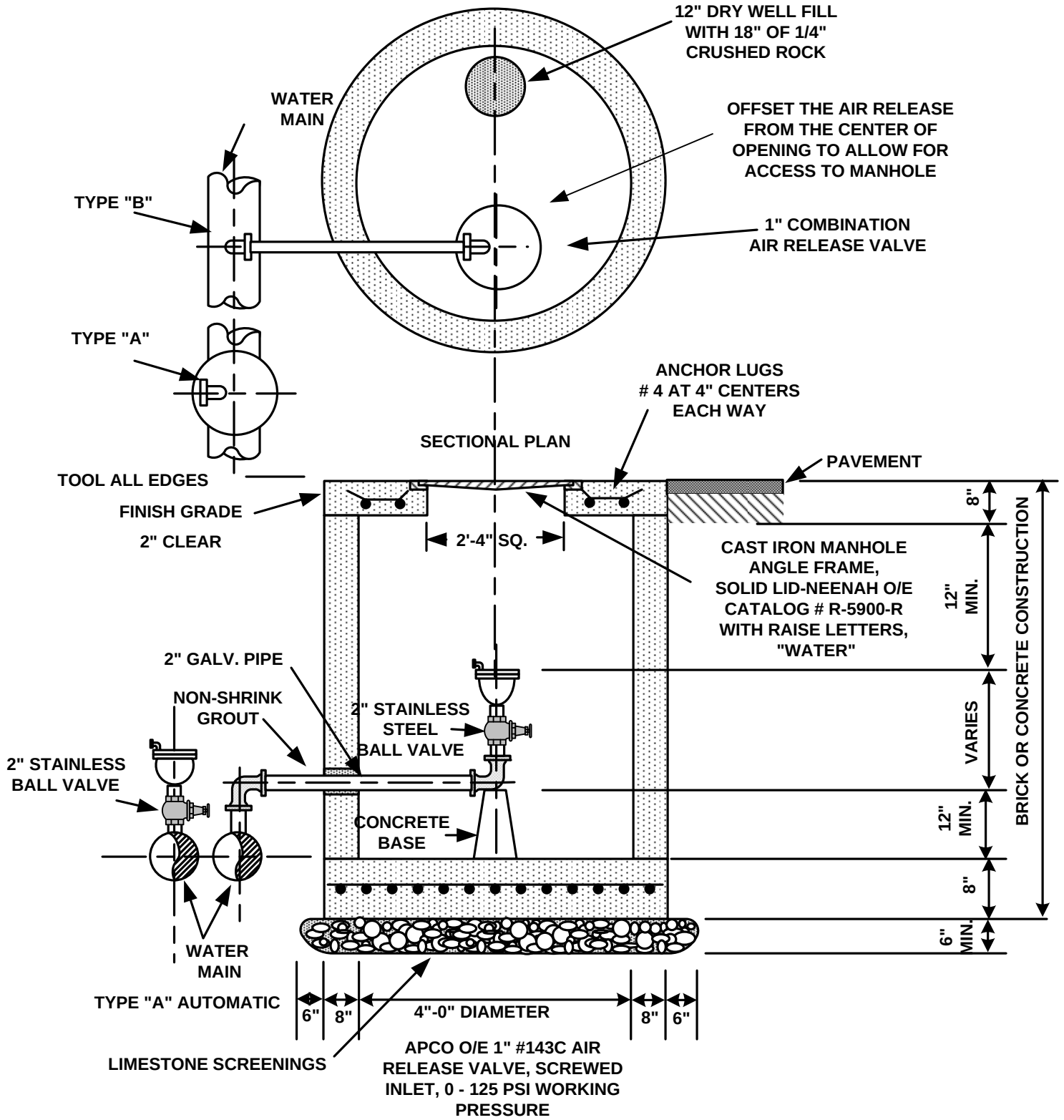
NOT TO SCALE